Class 73 Locomotive

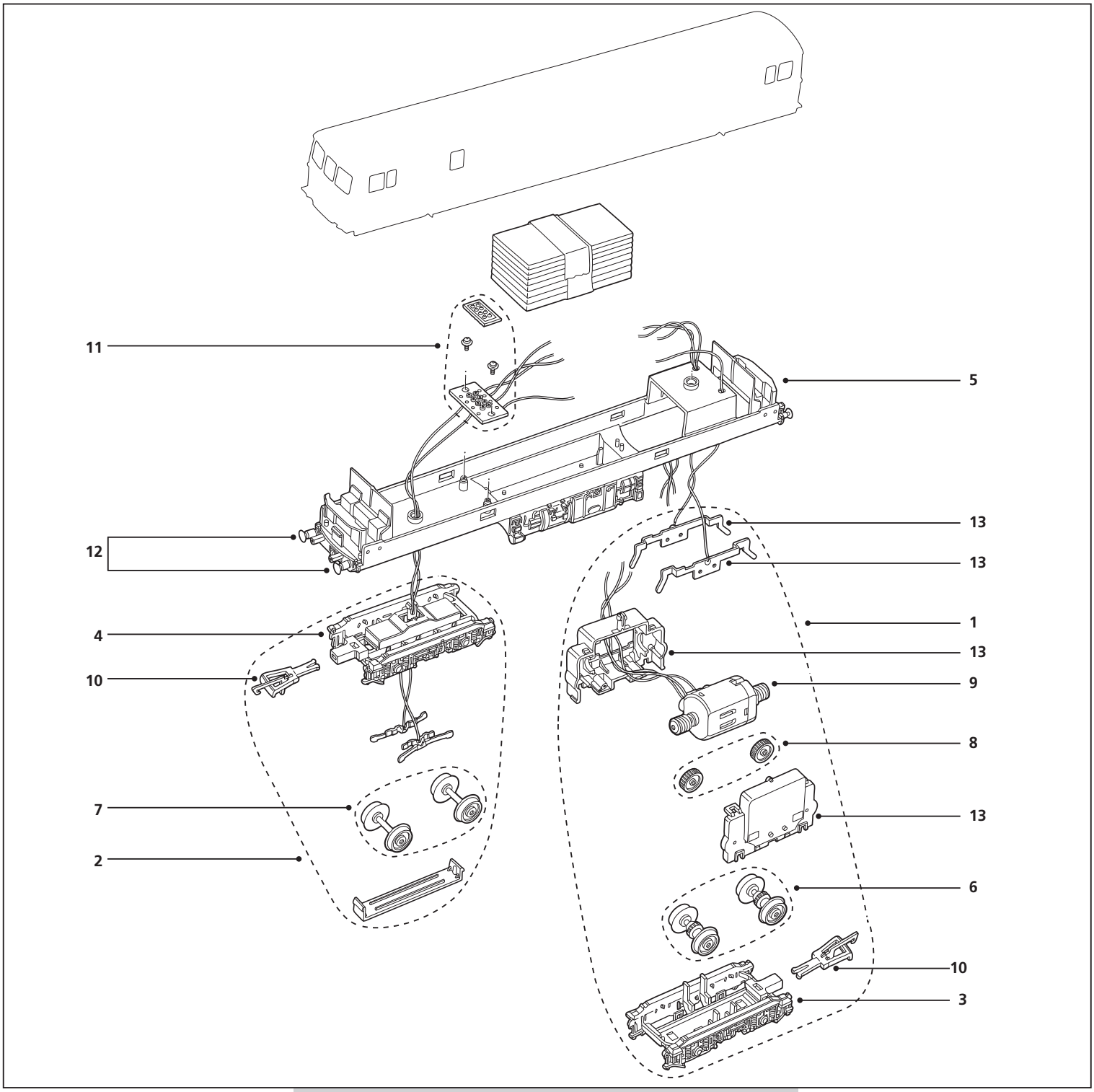

LIST OF SPARES

Item	Description	Pack	R2765, R2766, R2767 R3045, R3136, R3137
1	Drive Unit Complete (tyres)	1	X9838
2	Dummy Bogie Complete	1	X9839
3	Bogie Frame Drive Unit	2	X9840
4	Bogie Frame Dummy Bogie	2	X9837
5	Underframe	1	X9454
6	Wheel Set Drive Unit (tyres)	Set	X99692M
7	Wheel Set Dummy Bogie	Set	X9456
8	Gear Set	Set	X9443
9	Motor + Two Brass Flywheels	1	X9674
10	Coupling Pack	10	R8289
11	PCB Socket and Pins	set	X9084
12	Buffers	10	X9731
13	Drive Unit Side Frame Contacts	Pair	X6525
not illustrated	Tyres	10	X9721

HORNBY®
Hornby Hobbies Ltd, Westwood, Margate,
Kent CT9 4JX, England, United Kingdom

Service Sheet No.HSS 320C
Issued March, 2012
Printed in England

This instruction sheet or part thereof may not be copied, duplicated, amended or circulated in any form whatsoever without written permission from Hornby Hobbies Ltd.
© Hornby Hobbies Ltd.