CLASS 66 LOCOMOTIVE NEM COUPLINGS

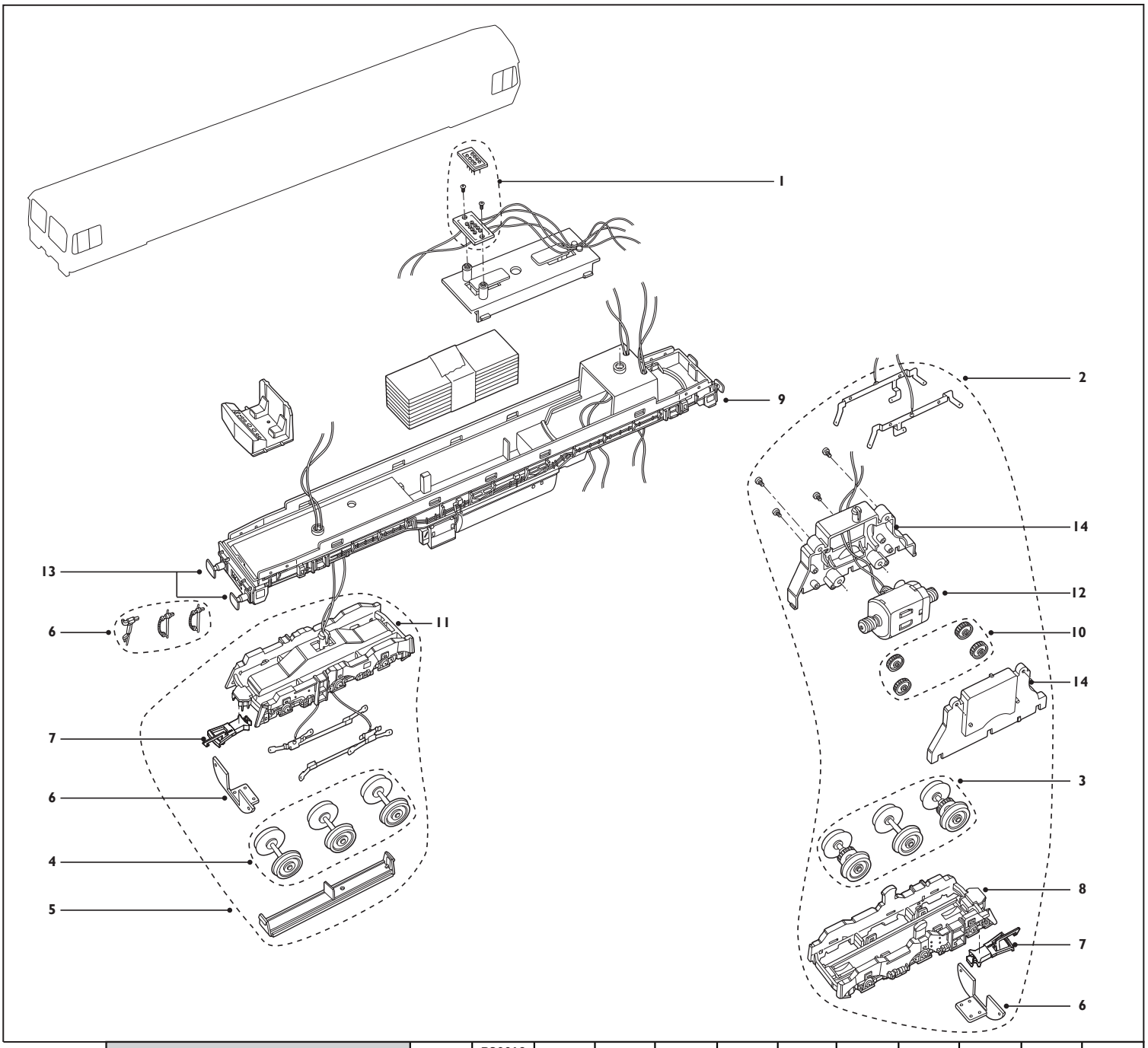

LIST OF SPARES

Item no	Description	Pack	R3573 R3345 R3076 R2954	R30019 R30020 R30021 R30022 R30023 R30024 R3748	R3042	R3182	R3747	R3777	R3787	R3779	R3784	R3785	R3786	R30074 R3778
1	PCB Socket and Pins	1+1	X9084	X9084T	X9084	X9084R	X9084T	X9084T	X9084T	X9084T	X9084T	X9084T	X9084T	X9084T
2	Drive Unit (complete)	1	X6370	X6370	X6371	X6370	X7430	X7431	X7440	X7445	X7450	X7455	X7460	X7431
3	Wheel Set Drive Unit	set	X9665M	X9665M	X9665M	X9665M	X9665M	X9665M	X9665M	X9665M	X9665M	X9665M	X9665M	X9665M
4	Dummy Bogie Wheel set	set	X9666	X9666	X9666	X9666	X9666	X9666	X9666	X9666	X9666	X9666	X9666	X9666
5	Dummy Bogie complete	1	X6372	X6372	X6373	X6372	X7432	X7433	X7441	X7446	X7451	X7456	X7461	X7433
6	Accessory Bag	pack	X5819	X13280	X5819	X5819	X13277	X13283	X13283	X13286	X13289	X13292	X13538	X13283
7	Coupling Assembly	pack	X9289	X9289	X9289	X9289	X9289	X9289	X9289	X9289	X9289	X9289	X9289	X9289
8	Bogie Frame (drive unit)	1	X6374	X6374	X6375	X6374	X7434	X7435	X7442	X7447	X7452	X7457	X7462	X7435
9	Underframe	1	X6376	X6376	X6377	X6376	X7438	X7439	X7443	X7448	X7453	X7458	X7463	X7465
10	Gears Pack for drive box axles ect	pack	X9671	X9671	X9671	X9671	X9671	X9671	X9671	X9671	X9671	X9671	X9671	X9671
11	Bogie Frame (dummy bogie)	1	X6378	X6378	X6379	X6378	X7436	X7437	X7444	X7449	X7454	X7459	X7464	X7437
12	Motor Assembly	1	X9674	X9674	X9674	X9674	X9674	X9674	X9674	X9674	X9674	X9674	X9674	X9674
13	Buffer Pack	pack	X9675	X9675	X9675	X9675	X9675	X9675	X9675	X9675	X9675	X9675	X9675	X9675
14	Side Frames	pair	X6380	X6380	X6380	X6380	X6380	X6380	X6380	X6380	X6380	X6380	X6380	X6380
NI	Tyres	10	X9722	X9722	X9722	X9722	X9722	X9722	X9722	X9722	X9722	X9722	X9722	X9722

Manufactured by:
Hornby Hobbies Ltd, Westwood
Margate, Kent, CT9 4JX, UK

EU Authorised Representative:
Hornby Italia SRL Viale dei Caduti,
52/A6, Castel Mella (BS), Italy, 25030

Service Sheet No.HSS 369E
Issued October, 2020

This Service sheet or part thereof may not be copied, duplicated, amended or circulated in any form whatsoever without written permission from Hornby Hobbies Ltd.
© Hornby Hobbies Ltd.

Printed in England